Heckler & Koch MP5 K-PDW

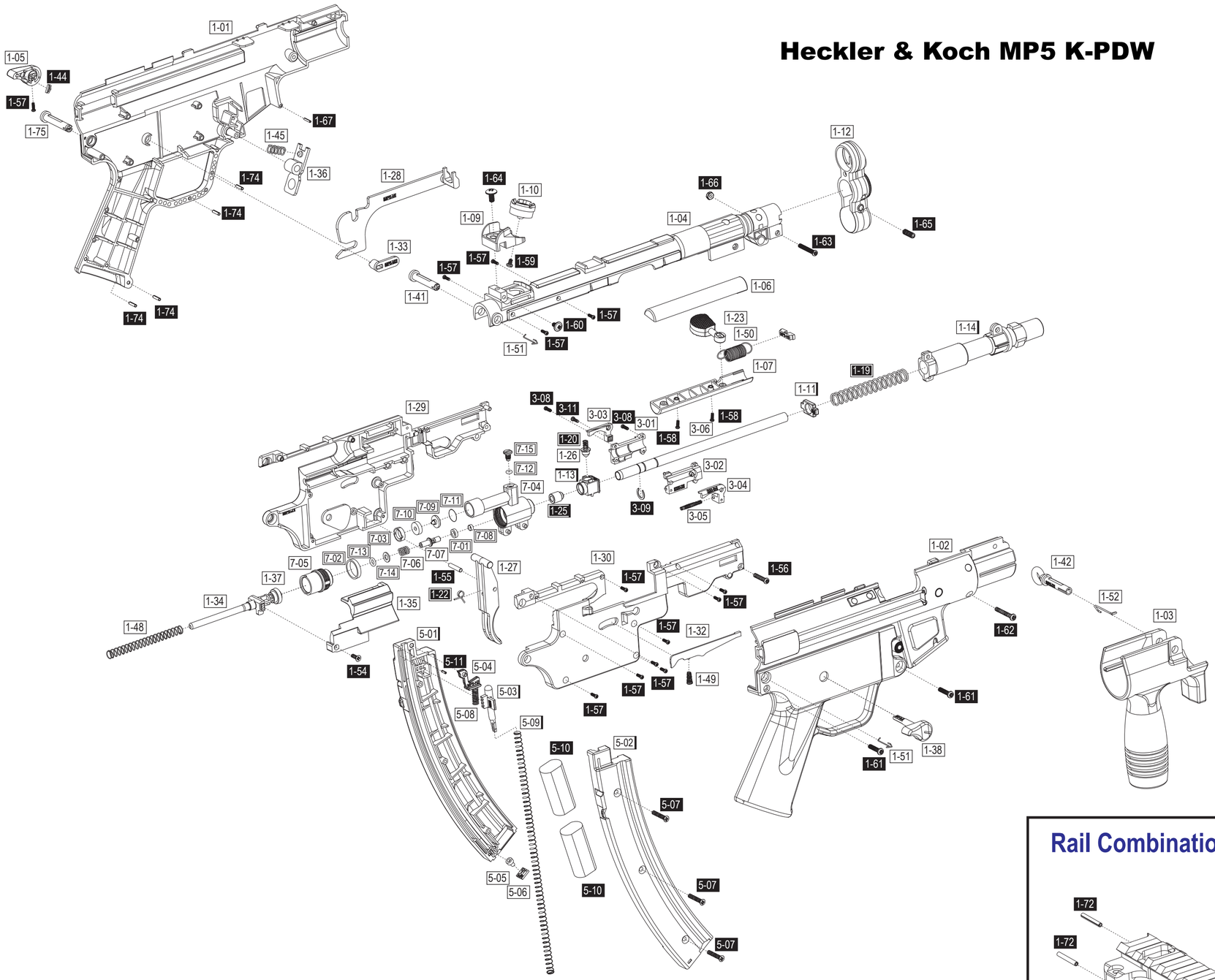

Butt Combination

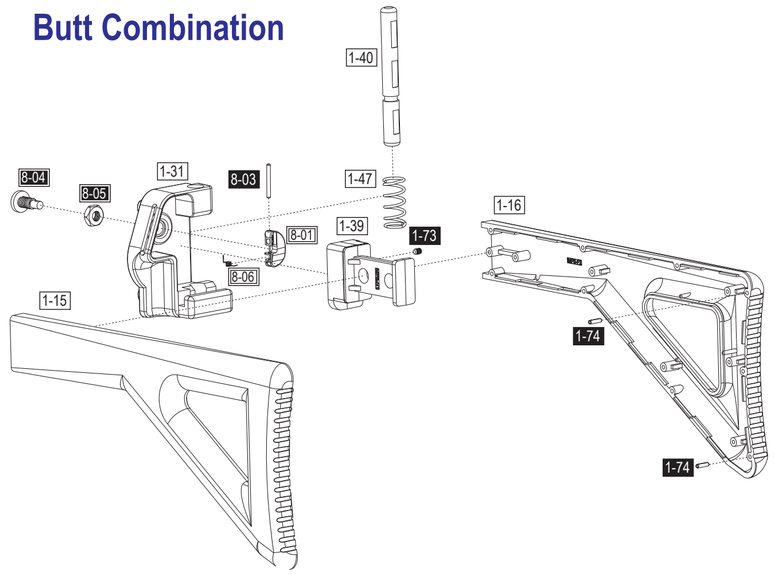

Rail Combination

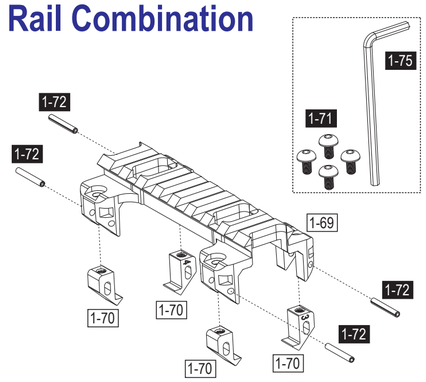

Back Cover Combination

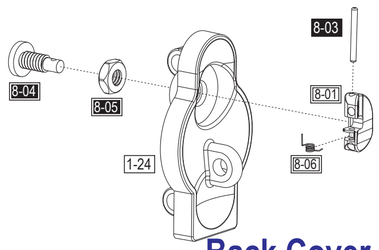

Muzzle Combination

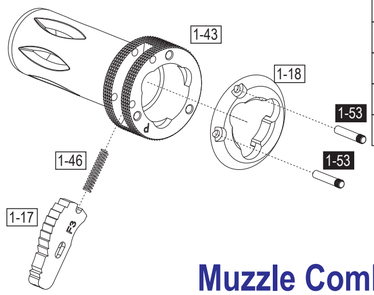

Spare parts available at:

spares.bagnallandkirkwood.co.uk

For spare parts not listed please contact us using the reference codes above