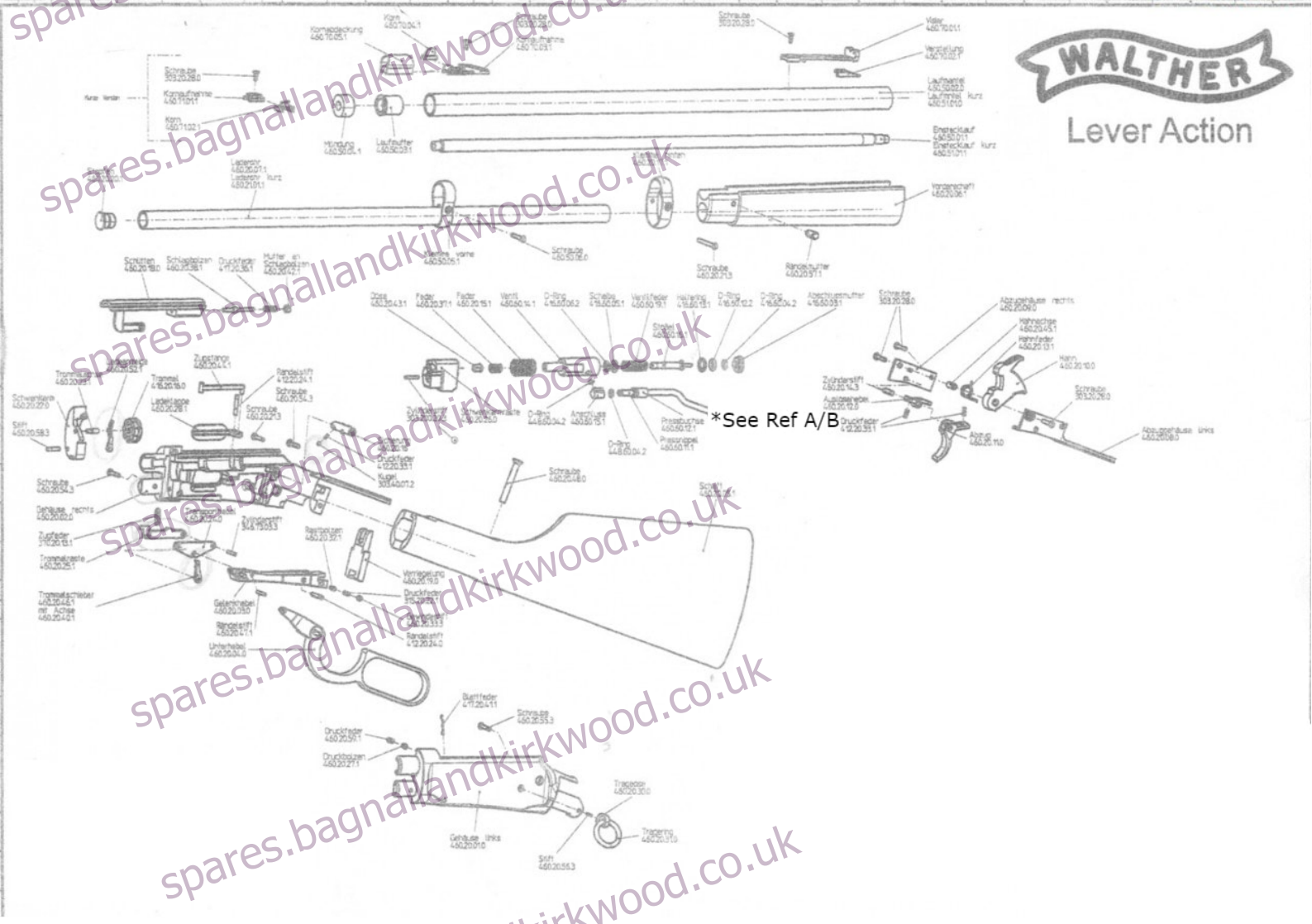

Ref: A - Twin 12gr CO2 Style

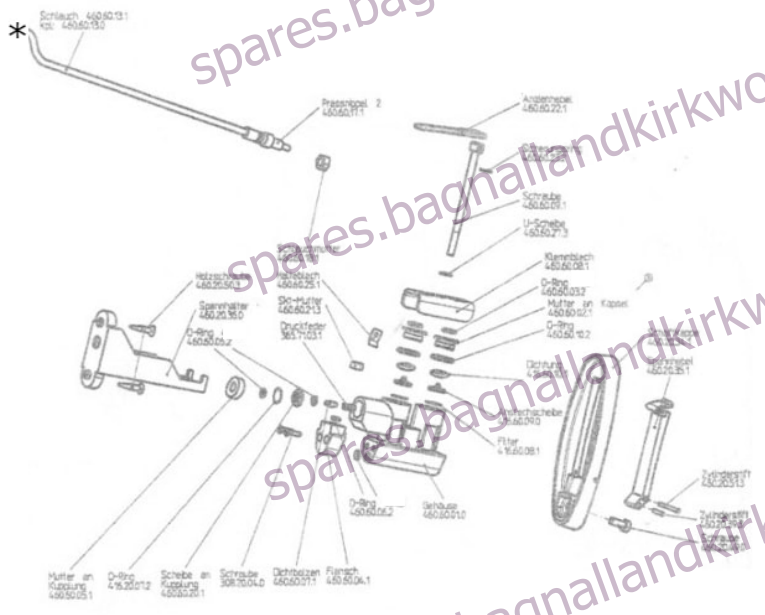

Ref: B - Single 88gr CO2 Style

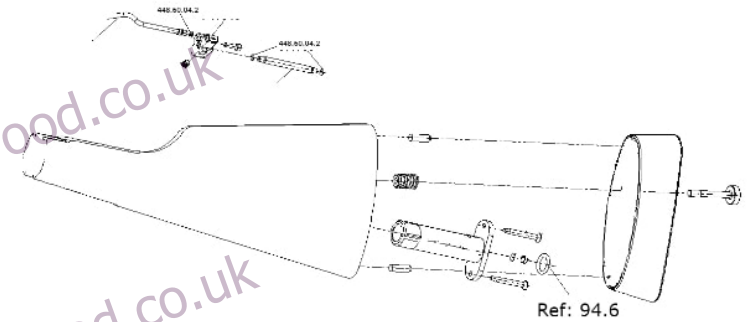

spares.bagnallandkirkwood.co.uk